Installation Instructions Supplement-High Ground Water Conditions

Contents-

Section 1.0 Buoyancy Force-Cover Fill Ballast Reference Tables ***"Do I need buoyancy control measures?"***
Reference tables are intended to assist in determining if buoyancy control measures are required for a particular installation. Reference application conditions used in generating these tables are as follows:

- Empty tank
- Water table elevation measured from the bottom of the tank
- Density of cover fill over tank top-115/ft³

Section 2.0 Excavation for High Ground Water Conditions ***"What are the site prep requirements for High Groundwater Installation?"***
Additional measures required to dewater and stabilize installation sites with high groundwater conditions.

Section 3.0 Installation Methods for Buoyancy Control ***"What buoyancy control measures can I use?"***
Roth approved methods included are:

- Cast in place concrete anti-flotation collar
- Concrete dead men with strap or cable tie-down system
- Earth anchors with strap or cable tie-down system

Appendix A Buoyancy and Cover fill ballast calculations
Tabular calculations and data supporting Section 1.0 Reference Tables

Appendix B- Concrete Anti-flotation Collar-Reference Buoyancy Calculations
Calculations and data supporting the Concrete Anti-flotation Collar buoyancy control measure

Appendix C Concrete Deadmen-Reference Buoyancy Calculations
Calculations and data supporting the Concrete Dead men buoyancy control measures, applicable to earth anchors as well.

CAUTION!
This document is intended to provide Engineers and Designers with a reference information with regard to the installation of the Roth MultiTank in elevated groundwater conditions. This document offers product specific information and general recommendations that can in no way account for site specific soil and groundwater characteristics that only the professional directly and locally involved can evaluate. Responsibility for specific installation site evaluation and selection of anti-flotation measures rests solely in the hands of the engineer/ designer tasked with the project.

Installation Instructions Supplement-High Ground Water Conditions

1.0 Buoyancy Force-Cover Fill Ballast Reference Tables - ***"Do I need buoyancy control measures?"***

CAUTION!

These reference tables are based on buoyancy force and cover fill ballast data shown in Appendix A. **There are no safety factors included in these values.** The intent of providing this data is to help the designer to calculate the initial retention ballast required to reach the neutral buoyancy point and total ballast required to meet safety factor requirements. **Cover fill ballast calculated at dry soil density-115 lbs/ft³**

RMT-500

WT Elev-in	14	20	26	32	38	44	50
Buoy. Force	983	1691	2341	2982	3574	4098	4457
Ballast-Cover Fill Depth 6 in	1305	1305	1305	1305	1305	1305	1305
12 in	2609	2609	2609	2609	2609	2609	2609
18 in	3914	3914	3914	3914	3914	3914	3914
24 in	5218	5218	5218	5218	5218	5218	5218
30 in	6523	6523	6523	6523	6523	6523	6523

Table 1

RMT-750

WT Elev-in	14	20	26	32	38	44	50
Buoy. Force	1949	3182	4340	5606	6739	7797	8330
Ballast-Cover Fill Depth 6 in	2189	2189	2189	2189	2189	2189	2189
12 in	4377	4377	4377	4377	4377	4377	4377
18 in	6566	6566	6566	6566	6566	6566	6566
24 in	8754	8754	8754	8754	8754	8754	8754
30 in	10943	10943	10943	10943	10943	10943	10943

Table 2

RMT-1000E

WT Elev-in	14	20	26	32	38	44	50
Buoy. Force	2274	3374	4748	6014	7505	8597	9671
Ballast-Cover Fill Depth 6 in	2560	2560	2560	2560	2560	2560	2560
12 in	5120	5120	5120	5120	5120	5120	5120
18 in	7680	7680	7680	7680	7680	7680	7680
24 in	10240	10240	10240	10240	10240	10240	10240
30 in	12800	12800	12800	12800	12800	12800	12800

Table 3

RMT-1060

WT Elev-in	14	20	26	32	38	44	50
Buoy. Force	2691	4332	5956	7605	9221	10487	11137
Ballast-Cover Fill Depth 6 in	2931	2931	2931	2931	2931	2931	2931
12 in	5863	5863	5863	5863	5863	5863	5863
18 in	8794	8794	8794	8794	8794	8794	8794
24 in	11725	11725	11725	11725	11725	11725	11725
30 in	14657	14657	14657	14657	14657	14657	14657

Table 4

Installation Instructions Supplement-High Ground Water Conditions **P-3**

1.0 Buoyancy Force-Cover Fill Ballast Reference Tables-*"Do I need buoyancy control measures?"*

RMT-1250	WT Elev-in	14	20	26	32	38	44	50
	Buoy. Force	2932	4631	6422	8205	9929	11445	12237
Ballast-	6 in	3303	3303	3303	3303	3303	3303	3303
Cover Fill	12 in	6605	6605	6605	6605	6605	6605	6605
Depth	18 in	9908	9908	9908	9908	9908	9908	9908
	24 in	13211	13211	13211	13211	13211	13211	13211
	30 in	16513	16513	16513	16513	16513	16513	16513

Table 5

RMT-1500	WT Elev-in	14	20	26	32	38	44	50
	Buoy. Force	3649	5798	8005	10213	12328	13828	14752
Ballast-	6 in	4021	4021	4021	4021	4021	4021	4021
Cover Fill	12 in	8041	8041	8041	8041	8041	8041	8041
Depth	18 in	12062	12062	12062	12062	12062	12062	12062
	24 in	16082	16082	16082	16082	16082	16082	16082
	30 in	20103	20103	20103	20103	20103	20103	20103

Table 6

Example:

- Tank: RMT-1250
- Cover Fill Depth (bury depth): 12 inches
- Water table elevation: 38 inches
- Safety factor required: 1.5

Cover Fill Ballast-12 inches of cover fill (ref dry density 115#/ft^3)=6605 lbs from Table 4 above
Buoyancy Force-38 inches water table elevation (tank empty)=9929 lbs from Table 4 above
9929-6605=**3324 lbs (additional "tie-down" force required to achieve neutral buoyancy)**
9929 x 1.5-6605= **8288 lbs (total additional "tie-down" force required to meet safety factor 1.5)**

Installation Instructions Supplement-High Ground Water Conditions **P-4**

2.0 Excavation for High Ground Water Conditions ***"How do I prepare the site for High Groundwater Installation?"***

Follow installation instructions sections 1.0 Site Selection and Preparation and 2.0 Excavation. When excavating in a site where high groundwater conditions are present, lengthen and deepen one end of the excavation to accommodate a dewatering pit as required.

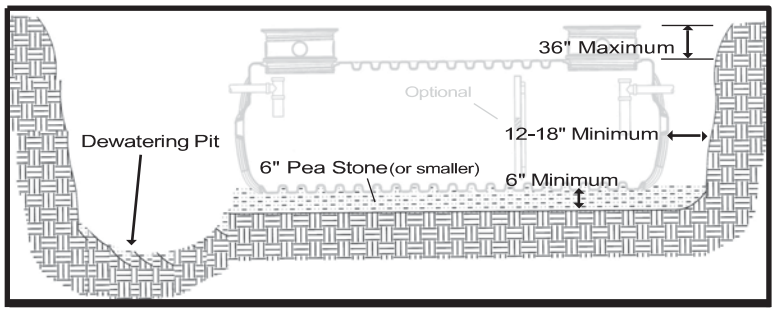

Fig 1

Bed tank with suitable compactible materials as required in Section 3.0 Tank Bedding. Install the tank per Section 4.0 including plumbing and risers.

3.0 Installation Methods for Buoyancy Control ***"What buoyancy control measures can I use?"***

3.1 Concrete Anti-flotation Collar **(See Appendix B for calculations and safety factors for the concrete collar)**

1) Install sidewall backfill in six inch lifts, insuring haunch support and compacting all the way around the tank until the backfill elevation is six inches below the part line rib and stop adding material.
2) Cut a length of #4 rebar into 18 inch lengths to use for stanchions to support (2) loops of #4 rebar.
3) Drive the stanchions into the compacted sidewall backfill around the tank 3-4 inches out from the tank wall spaced 2-3 ft apart, leave 10-11 inches of stanchion exposed.
4) Bend and install the first #4 rebar loop by wire tying to the stanchions 3 inches above the surface of the compacted backfill, overlap and tie the ends of the loop together.
5) Repeat step 4) with a second #4 rebar loop tied to the stanchions six inches above the first.
6) Pour concrete around the septic tank until the depth is 12 inches (six inches above the part line rib).
7) Allow concrete to partially cure then complete backfilling and finish installation per Roth Installation Instructions.
8) **All Tanks installed using buoyancy control measures must be equipped with stiffening posts.**

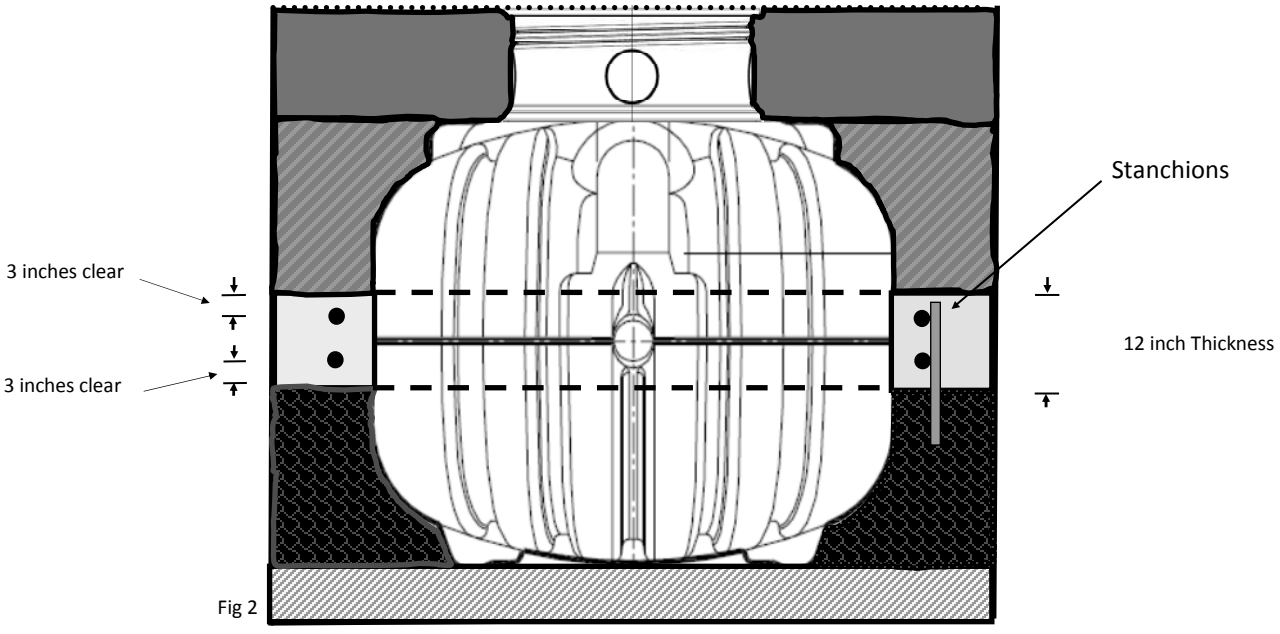

Fig 2

Installation Instructions Supplement-High Ground Water Conditions **P-5**

3.0 Installation Methods for Buoyancy Control ***"What buoyancy control measures can I use?"***

3.1 Concrete Dead Men

This method involves the installation of concrete dead men or curbing along the sides of the tank at the bed level. The tank is then secured to the dead men with restraining cables or straps. Counter buoyant force is is a combination of the mass of the dead men and the backfill soil column above them and the cover fill over the tank.

As there is a large variation of precast dead men dimensions and weights that might be used for securing tanks, the methods and associated calculations shown are offered as general reference.

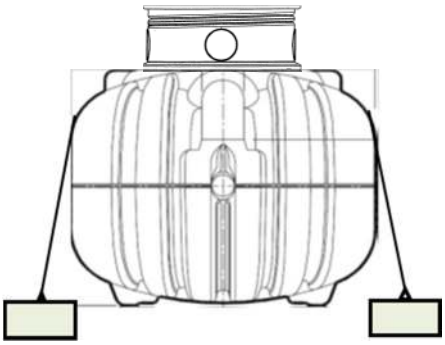

Fig 3

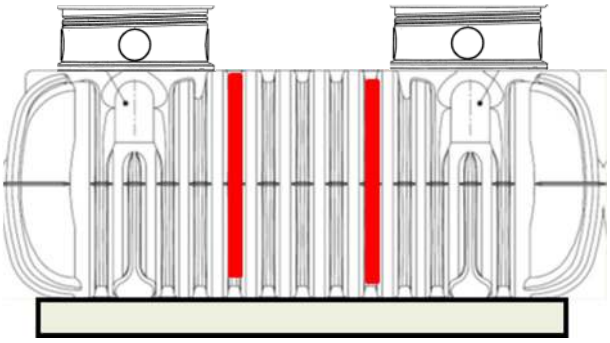

Fig 4

Installation procedures:

1) Excavate to 3-4 inches below bed elevation level per standard installation instructions.
2) Trench along the sides of the excavation to a depth of 5-6 inches leaving a tank width (62 in) or a little greater between the trenches. Compact the trench base with the machine bucket as these trench bottoms will serve as the bedding surfaces for the concrete dead men.
3) Place the deadmen in the trenched areas at a depth that allows the top of the deadmen to be level with the compacted bed elevation.
4) Place the tank between the dead men insuring the tank is level and plumb.
5) **All RMT tanks installed with buoyancy control measure must include the stiffening posts.**
6) Install sewer and effluent lines insuring that they are properly pitched and bedded per Roth standard installation instructions.
7) Secure the tank to the dead men using strapping or cable products approved for buried installation.
   - -Buried service polyester web strapping-minimum tensile rating-10,000 lbs
   - -Galvanized steel or stainless steel flat strapping-1-1/4" width x .031" minimum, 4500# tensile minimum
   - -Galvanized steel or stainless steel wire rope-1/2" dia., min breaking strength 21,400lb/ft, safe load 4280 lb/ft
   - -All load bearing components-turnbuckles, clevises, hooks, cable clamps and the balance of anchoring hardware used to secure tie down system must by galvanized or suitably coated to protect against corrosion.
   - -Tie down straps or cables placed over the tank top must be placed directly over the stiffening post tenons.
   - -Tighten restraining straps/cables only enough to provide moderate tension.
   - -Refer to fig 4 for details on corner tie down points for RMT-500 and RMT-750 tanks.
8) Install sidewall backfill in six inch lifts, compacting and each lift and insuring fill material is worked into the tank haunch.
9) Install cover fill over tank top and around risers per Roth Installation Instructions.

Installation Instructions Supplement-High Ground Water Conditions **P-6**

3.0 Installation Methods for Buoyancy Control ***"What buoyancy control measures can I use?"***

3.1 Concrete Dead Men

Tank Anchoring Diagrams

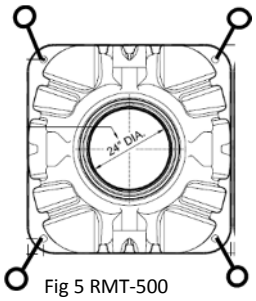

Fig 5 RMT-500

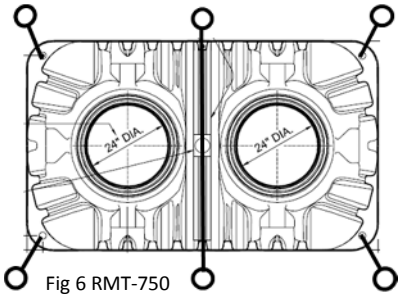

Fig 6 RMT-750

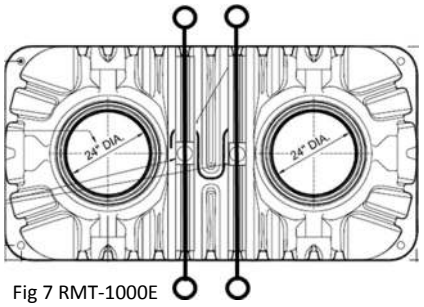

Fig 7 RMT-1000E

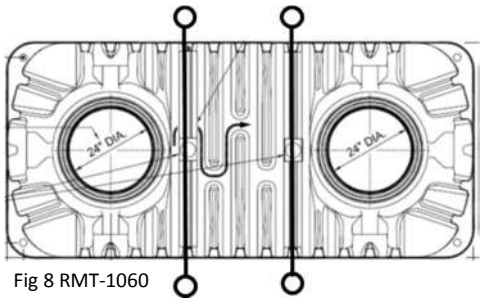

Fig 8 RMT-1060

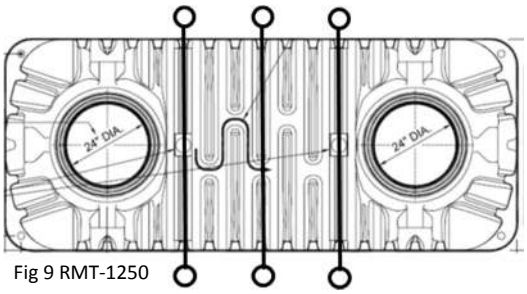

Fig 9 RMT-1250

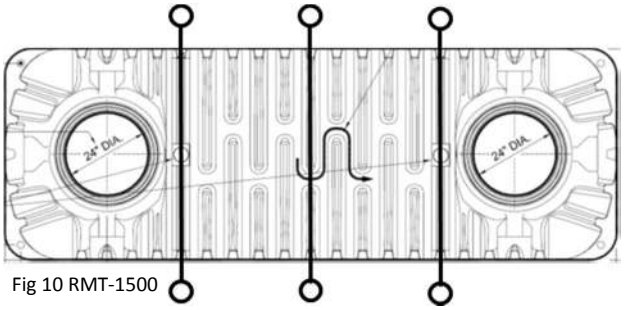

Fig 10 RMT-1500

Corner Tie-down Detail-RMT-500, RMT-750

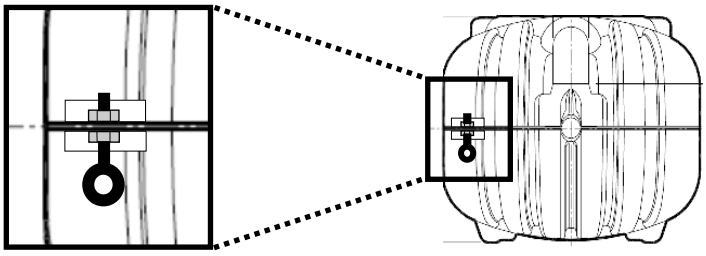

Fig 11

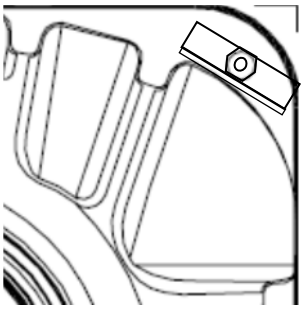

Fig 12

Installation Instructions Supplement-High Ground Water Conditions **P-7**

<u>3.0 Installation Methods for Buoyancy Control</u> ***"What buoyancy control measures can I use?"***

3.1 Concrete Dead Men

Corner Tie-down Detail-RMT-500, RMT-750

Bill of materials- (4) Corner tie down eyes

- (4) 1/2"-13x 4" Galvanized eyebolts
- (8) 1/2"-13 Galvanized nuts
- (8) 1-1/2" x 6" Galvanized Angle clearance drilled for 1/2" eyebolt (9/16" hole)

Installation:

1) Run a nut on the eyebolt shank and slide one of the lengths of drilled angle on after it.
2) Insert eyebolt shank through the lifting eye hole in the RMT part line rib from below.
3) Slide the other length of drilled angle over the eye bolt shank followed by a nut
4) Tighten securely.





Installation Instructions Supplement-High Ground Water Conditions **P-8**

3.0 Installation Methods for Buoyancy Control ***"What buoyancy control measures can I use?"***

3.2 Earth Anchors

An approved alternate to concrete deadmen is the use of helical earth anchors (screw piles) to secure the tank in the excavation to provide the required tie down force to prevent flotation.





Installation Procedures:

1) Follow Roth Installation Instructions for excavation and tank bedding and compaction.
2) Install the earth anchors after the tank is bedded.
3) Use the Tank Anchoring Diagrams on Page 5 to layout the locations for the earth anchors.
4) Secure the tank to the earth anchors using the strapping/cabling recommendations included in the Concrete Deadmen installation procedures on Page 4.
5) **All RMT tanks installed with buoyancy control measure must include the stiffening posts.**
6) Install sidewall backfill in six inch lifts, compacting and each lift and insuring fill material is worked into the tank haunch.
7) Install cover fill over tank top and around risers per Roth Installation Instructions.
8) For reference Max Tie Down Load per anchor point see Page 13

Use the tank anchoring diagrams on Page 5 to plan installation.

CAUTION

Roth Global Plastics assumes no responsibility for the selection and installation of Earth Anchor equipment. While Earth Anchors are supplied with reference maximum pull out force, actual soil type/classification, density, moisture content vastly effect the actual pull out force that a specific product can provide.

The following is a list of suggested earth anchor manufacturers that the designer/installers may consult to determine anchor requirements for a specific project

Allied Bolt Inc.
3000 Marcus Avenue, Suite 3E09
Lake Success, NY 11042
516-512-7600
516-512-7611 (fax)
www.alliedboltinc.com

Installation Instructions Supplement-High Ground Water Conditions **P-9**

3.0 Installation Methods for Buoyancy Control ***"What buoyancy control measures can I use?"***

3.2 Earth Anchors

Earth Anchor manufacturers continued-

American Earth Anchors
20 Grove St. Franklin, MA 02038
508-520-8511
www.americanearthanchors.com

Viking Helical Anchors
7615 Smetana Lane, Ste. 140
Eden Prairie, MN 55344
(800) 733-3801 .:. .
Fax: (952) 941-4633
http://www.vikinghelicalanchors.com/

Installation Instructions Supplement-High Ground Water Conditions **P-10**

Appendix A Buoyancy and Cover fill ballast calculations

Buoyancy calculations based on the following conditions

- Tank contents– Empty
- Buoyant force=Net tank capacity in gallons x Density of water (8.33# per gallon)
- Water table elevation=inches above the bottom of the tank

Buoyant Force Summary

Water table elev.		14	20	26	32	38	44	51
RMT-500	Net Gal	118	203	281	358	429	492	535
	Lb. Force	983	1691	2341	2982	3574	4098	4457
RMT-750	Net Gal	234	382	521	673	809	936	1000
	Lb. Force	1949	3182	4340	5606	6739	7797	8330
RMT-1000E	Net Gal	273	405	570	722	901	1032	1161
	Lb. Force	2274	3374	4748	6014	7505	8597	9671
RMT-1060	Net Gal	323	520	715	913	1107	1259	1337
	Lb. Force	2691	4332	5956	7605	9221	10487	11137
RMT-1250	Net Gal	352	556	771	985	1192	1374	1469
	Lb. Force	2932	4631	6422	8205	9929	11445	12237
RMT 1500	Net Gal	438	696	961	1226	1480	1660	1771
	Lb. Force	3649	5798	8005	10213	12328	13828	14752

Installation Instructions Supplement-High Ground Water Conditions **P-11**

Appendix A Buoyancy and Cover fill ballast calculations

Cover fill ballast calculations based on the following conditions:

Soil density-115#/ft³

Cover fill ballast=Net top tank area (LxW) **-** manway area x soil depth/1728 x soil density

Example: RMT 1060- Length- 133”, Width- 62”, Manway area- (π 12²) - 452.5sq” x 2(Manway)=905sq²

(133x62-905) x 12/1728 x 115= 5862.60 lbs

Cover Fill Ballast					
Depth	6in	12in	18in	24in	30in
RMT-1500	4020.61	8041.22	12061.82	16082.43	20103.04
RMT-1250	3302.66	6605.31	9907.97	13210.63	16513.28
RMT-1060	2931.30	5862.60	8793.91	11725.21	14656.51
RMT-1000E	2559.95	5119.90	7679.84	10239.79	12799.74
RMT-750	2188.59	4377.19	6565.78	8754.38	10942.97
RMT-500	1304.53	2609.06	3913.59	5218.13	6522.66

Installation Instructions Supplement-High Ground Water Conditions **P-12**

Appendix B- Concrete Anti-flotation Collar-Reference Buoyancy Calculations

Reference Installation Conditions-		
Tank level	Empty	
Cover fill depth	12 inches	
Ground water elevation	At the top of the tank (51 inches above the tank bed, 12 in below finish grade)	
Soil density	Dry-115#/cu ft	Saturated-52.5#/cu ft
Concrete density	Dry-150#/cu ft	Submerged- 87.5#/cu ft
Water density	62.5#/cu ft	8.33#/gallon
Concrete collar dimensions	12" High x 12" Wide (typical installation width will be 16-18 inches, using a reference width of 12" is a bit conservative and the minimum width)	

*Manway area is not included in the cover fill displacement calculation (assume risers to grade)

*No prismatic or soil shear effect is considered; the effective cover fill displacement area is equal to the outline dimensions of the concrete collar

1) Total Buoyant Force (TBF) (from Appendix A)

Tank Size	Gross Volume	**Total Buoyant Force Lbs**
500	535	**4457**
750	1000	**8330**
1000E	1161	**9671**
1060	1337	**11137**
1250	1469	**12237**
1500	1771	**14752**

2) Total Counter Buoyant Force (TCBF) = 2a) Concrete Collar Displacement + 2b) Sidewall Backfill + 2c) Cover Fill

2a) Concrete Collar Displacement in Lbs.

Tank Size	Collar Length	Collar Width	Lx2	Wx2	Cu Ft Tot	**Collar Displacement Lbs**
500	84	62	168	124	24	**2129**
750	127	62	254	124	32	**2756**
1000E	142	62	284	124	34	**2975**
1060	157	62	314	124	37	**3194**
1250	172	62	344	124	39	**3413**
1500	201	62	402	124	44	**3835**

2b) Sidewall Backfill-Saturated (between the collar and top of tank) Displacement in Lbs.

Tank Size	BF Length	BF Width	Lx2	Wx2	LL Total	Total Cu Ft	**Sidewall Backfill Displacement Lbs**
500	84	62	168	124	24	40	**2076**
750	127	62	254	124	32	51	**2687**
1000E	142	62	284	124	34	55	**2901**
1060	157	62	314	124	37	59	**3114**
1250	172	62	344	124	39	63	**3327**
1500	201	62	402	124	44	71	**3740**

Installation Instructions Supplement-High Ground Water Conditions **P-13**

Appendix B Concrete Anti-flotation Collar-Reference Buoyancy Calculations

2c) Cover Fill-Dry Density (from top of tank to finish grade) Displacement in lbs.

Tank Size	Length	Width	**Cover Fill Displacement**
500	84	86	**6863**
750	127	86	**10199**
1000E	142	86	**11489**
1060	157	86	**12779**
1250	172	86	**14069**
1500	201	86	**16563**

Total Counter Buoyant Force

Tank Size	**Total Counter Buoyant Force**	**Total Buoyant Force**	**Safety Factor**
500	**11068**	**4457**	**2.48**
750	**15643**	**8330**	**1.88**
1000E	**17365**	**9671**	**1.80**
1060	**19087**	**11137**	**1.71**
1250	**20809**	**12237**	**1.70**
1500	**24138**	**14752**	**1.64**

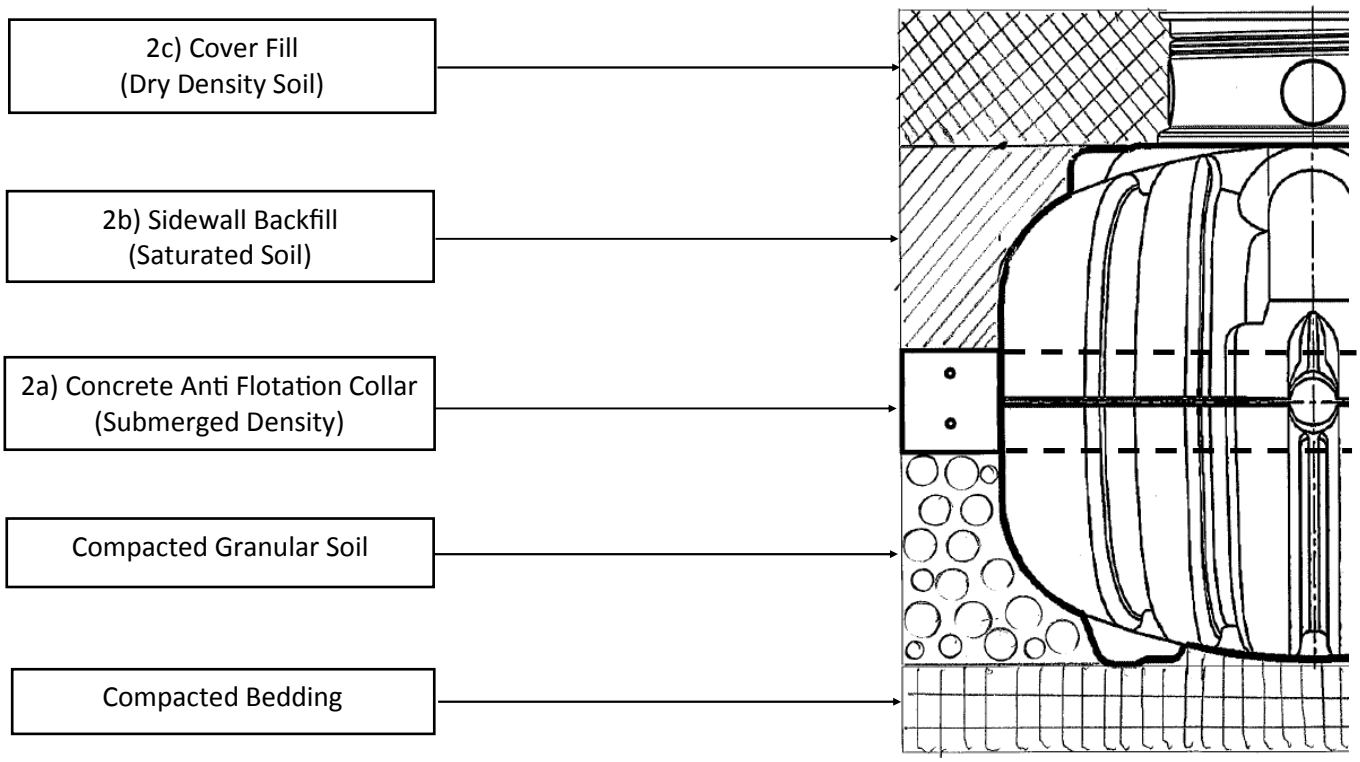

Installation Instructions Supplement-High Ground Water Conditions **P-14**

Appendix C Concrete Deadmen-Reference Buoyancy Calculations

Reference Installation-Concrete Deadman
Grounwater elevation- top of the tank
Tank level- empty

Deadmen Specifications

Dimensions	12 in Wide x 8 inch thick x 60 in length	
Weight	Dry	500 lbs (150 lb/cu ft)
	Submerged	290 lbs (87 lb/cu ft)
Soil Density	Dry	115 lbs/cu ft
	Saturated	52.5 lbs/cu ft

RMT	Total Ballast @6"(lb)	Total Ballast@12"(lb)	Total Ballast@18(lb)	Net Bouyancy (lb)
500	4691.18	6571.11	8451.04	4457
750	8165.99	11341.67	14517.34	8330
1000E	9238.91	12929.69	16620.47	9671
1060	9381.96	13141.42	16900.89	11137
1250	11964.74	16685.73	21406.72	12237
1500	14039.05	19755.90	25472.76	14752

			Safety Factors			
RMT	No. of Deadmen	No. of Tie Down Pts	SF @6"	SF @ 12"	SF @ 18"	Max Tie Down Load per Pt.(lb) *
500	2	4	1.05	1.47	1.90	788.12
750	4	6	0.98	1.36	1.74	1023.57
1000E	4	4	0.96	1.34	1.72	1777.76
1060	4	4	0.84	1.18	1.52	2051.42
1250	6	6	0.98	1.36	1.75	1489.06
1500	6	6	0.95	1.34	1.73	1788.57

*based on 6 inch cover fill depth.